MERCRUISER (470 (2 BBL.) MERCURY 224 I/L4 1983-1984)
Serial Nbr Range: 6218037 THRU 6916778 ()

EXHAUST MANIFOLD AND EXHAUST ELBOW

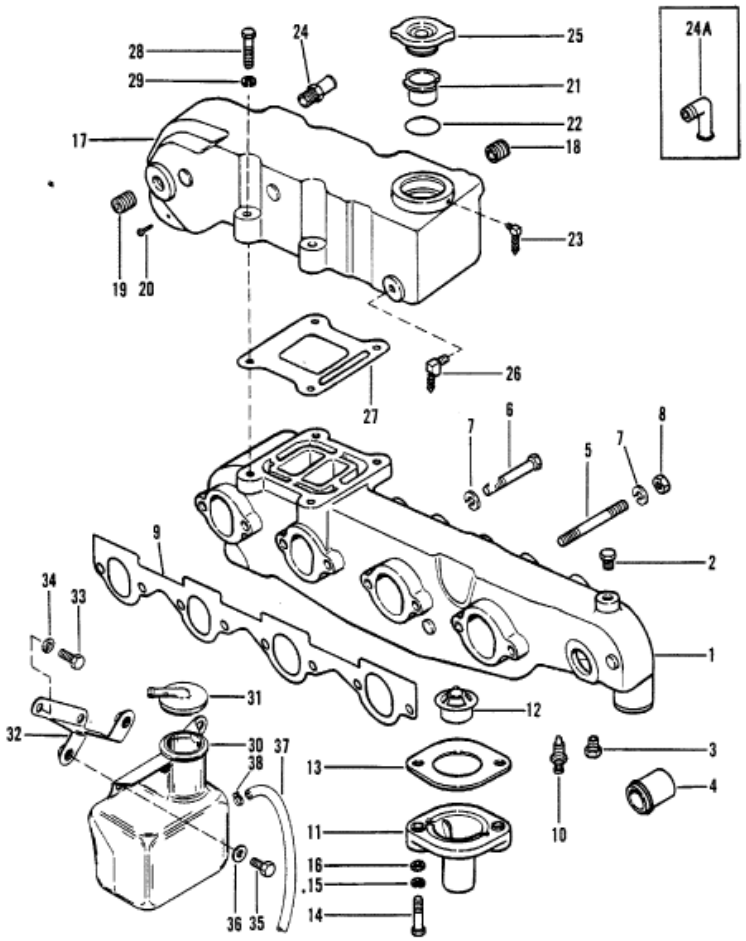

Parts List

Ref	Class	Part	Description	Qty	Comment	Footnote
1		99908A 3	EXHAUST MANIFOLD ASSEMBLY	1		
2	22	32802	PIPE PLUG (1/8-24NPT)	1		
3	22	32803	PIPE PLUG-DRAIN	1		
4	23	72119	WATER SLEEVE	1		
5	16	78438	STUD, EXHAUST MANIFOLD TO	1		
6	10	89679	SCREW, EXHAUST MANIFOLD TI	4		
7	13	35048	LOCKWASHER, EXHAUST MANIF	7		
8	11	24883	NUT, EXHAUST MANIFOLD STUD	3		
9	27	68715	GASKET, EXHAUST MANIFOLD T	1		2
10		75669	SENDER, WATER TEMPERATUF	1		
11		89659	THERMOSTAT HOUSING	1		
12		99155A 1	THERMOSTAT	1		
13	27	89656	GASKET, THERMOSTAT HOUSIN	1		2
14	10	73657	SCREW, THERMOSTAT HOUSIN	2		
15	13	39107	LOCKWASHER, THERMOSTAT H	2		
16	12	26825	WASHER, THERMOSTAT HOUSI	2		
17		90880A 2	EXHUST ELBOW AND RESERVO	1		
18	22	32802	PIPE PLUG (1/8-27 NPT)	1		
19	22	33198A 1	CORE PLUG (3/4-14)	2		
20	10	28642	SCREW, DRIVE	4		
21	22	58471	BASE, FILLER HOLE	1		
22	25	45257	O- RING, FILTER BASE	1		2
23	22	74033	OBERFLOW ELBOW (PRESSED	OPT		
24	22	36305	ELBOW, COOLER HOSE (W/O PC	1		
24	22	45084	ELBOW, COOLER HOSE (W/POW	1		
25	36	55143	CAP, FILLER	1		
26	22	76170	FITTING, RESERVOIR BY-PASS	1		
27	27	97542	GASKET, ELBOW AND RESERVC	1		
28	10	37269	SCREW, ELBOW AND RESERVO	4		
29	13	32993	LOCKWASHER, ELBOW AND RE!	4		
30		91987A 1	BOTTLE ASSEMBLY, COOLANT F	1		
31	36	91989A 1	CAP ASSEMBLY	1		
32		97864A 2	BRACKET ASSEMBLY, BOTTLE	1		
33	10	47461	SCREW, BOTTLE BRACKET	2		
34	13	37272	LOCKWASHER, BOTTLE BRACKE	2		
35	10	27165	SCREW, BOTTLE TO BRACKET	2		
36	12	25909	WASHER, BOTTLE SCREW	2		
37	32	77457 2	HOSE, COOLANT RECOVERY BO	1		
38	54	54428	CLAMP, HOSE ATTACHING	2		